AURA by Simtech

Innovation of Fire Protection

GLORY



Fire Curtain And Smoke Curtain

BRITISH STANDARD

What is a Fire Curtain ?

Similar in basic design to a roller shutter, a fire curtain comprises a fabric made of heavyweight glass fibre, reinforced with stainless steel wire and coated with a formulated fire retardant aluminium pigmented polyurethane coating. Speciallist control systems allow a curtain to descendvia a 24-volt gravity fail safe motor to compartmentalise a building. As well as a control panel which gives the fire curtain the ability for single descent or descend partially hold and continue descent, additional functionality can be achieved with the installation of egress swithches, access switches, and single and light curtain obstruction warnings are also available. All of these ancillary products are tested in accordance with BS 8524-1, specifically Annex H. Relevant standards for a fire curtain are EN BS 1634-1 (2014) under testing as active fire barries or BS 8524-1 which adds to the fire performance standards of BS 1634. A fire curtain can be horizontal or more commonly vertical. A fire curtain can be either face fixed or reveal fixed but the structure into which a fire curtain is fitted cannot have a fired rating of less than the fire curtain. Fire curtains provide 120 minutes integrivy against flaming and hot gases and can achieve radiation ratings of either 85 minutes at 15 kw/m2 or 120 miniutes at 15 kw/m2 and as such are classified as either EW 60 or EW 120.



DATASHEET: 4415-2-SP (SC)
Description

4415-2-SP (SC) is a heavyweight glass fabric which is reinforced with stainless steel wire, coated with a specially formulated fire-retardant aluminium pigmented polyurethane coating.

4415-2-SP (SC) provides high temperature resistance, and reflectivity which provide a heat reflecting surface as well as other properties for the manufacture of smoke, fire curtains and blinds, cavity wall fire barriers and other types of smoke and fire control systems. The material is halogen free, has an improved resistance to hydrolysis and offers a rigid handle.

TECHNICAL DATA				
BASE FABRIC			**TOLERANCE**	**TEST METHODS**
Yarn	Warp Weft	EC9 68x2 + IV1 S/S wire EC9 68x2 + IV1 S/S wire		DIN EN 12654
Thread Count	Warp Weft	16.0 per 1 cm 15.3 per 1 cm	±5%	DIN EN 1049
Tensile Strengeth (typical)	Warp Weft	930 N/cm 900 N/cm		DIN EN 12654
Weight		640 g/m2	±5%	DIN EN 12127
Weave		8 Shaft Satin		DIN ISO 9354

Coated Fabric

Coating Fire retardant polyurethane with added aluminium pigment on both sides

Weight		690 g/m2	±10%	DIN EN 12127
Thickness		0.54 mm	±10%	DIN ISO 4603/E
Tensile Strengeth (typical)	Warp Weft	930 N/cm 900 N/cm		DIN ISO 4606

Thermal conductivity (typical) Thermal resistance (typical)

0.0956 W/m "K DIN 52612 1/2
0.0079 m2 "K/W DIN 52612 1/2

Temperature Resistance -36 to 150°C
Tolerates 180°C for short periods, Glass fibre fabric reinforced with stainless steel wire maintains its integrity up to 1100°C

Fire Standards & **approvals** class O
EN 13501-1
BS 476 part 6:1989. Part 7 1997 A2,s1,d0 & BG

This material has been shown suitable for the manufacture of fire curtains rated for 2 hours according to BS 476 Part 20/22.

Important - Information on the above characteristics is based upon tests we believe to be reliable. The values given are typical values that vary according to application conditions. The values are intended only as a source of information and are given without guarantee and do not constitute a warranty. It should be notedthat the substrate test materials are generic and actual results may vary from those given above. Purchasers should independently determine prior to use the suitability of this material for their specific purposes. All A1S Glass materials described herein are sold subject to A1S conditions of sale, acopy of which is available on request.



Constructionline
Gold Member

CERTIFICATE
OF MEMBERSHIP

A1 Shutters Ltd

Registration No: 183254

Date Issued: 26 July 2021

This certifies that the member named above has met pre-qualification requirements appropriate to public and private sector procurement.

A supplier's verification status is dynamic, this certificate proves the Supplier was verified to the named level on the date stated only. For the current status please check the Constructionline platform.

GOLD MEMBER

Constructionline

PO BOX 6441, Basingstoke, Hampshire, RG21 7FN
0333 300 1066
constructionline.co.uk



Acclaim Accreditation

SSIP SAFETY SCHEMES IN PROCUREMENT

Certificate of Health & Safety Accreditation

This is to certify that

A1 Shutters Ltd

has achieved Acclaim Accreditation

Deemed To Satisfy

signed

Dave Sherwood
Quality Assurance and Contract Manager

Constructionline registration no. 183254
Acclaim assessment no.

Start date 20 February 2019
End date 20 February 2021

This certificate remains the property of Acclaim Accreditation and must be surrendered on demand. For verification please contact Acclaim Accreditation on 0844 892 0313 (Option 3).

AcclaimAccreditation.co.uk
acclaim@constructionline.co.uk

Acclaim Accreditation is a service brought to you by Constructionline and is administered by Supplier Assessment Services Limited. Registered in England No. 11788766.



IFC certification

PRODUCT CERTIFICATION SCHEME SDP11-02

Certificate number: IFCC 1542

This is a product certificate to certify that

A1 Shutters Limited
Raikes Lane Industrial Estate,
Raikes Lane,
Bolton BL3 2NH
Who fabricate the following product:

Product Type:	Active Fire Curtain Barrier Assembly
Product Name:	Flameshield Fire Curtain
Construction Type:	Single
Fabric Type:	4415-2-SP
Product Standard:	BS 8524-1:2013
Fire Resistance:	120 minutes Integrity (E) and 60 minutes Radiation (EW) performance to EN 1634-1:2014+A1:2018 (EN 1363-1:2012 & EN 1363-2:1999)
Classification:	E15, E20, E30, E45, E60, E90 & E120 plus EW60 to EN 13501-2:2016

have satisfied the requirements of scheme SDP11-2 this includes evaluation of the product performance in accordance with ***BS 8524-1:2013****, inspection of the Factory Production Control and continuing surveillance audits and testing of samples of products taken from production. The product specification and field of application are detailed in the Schedule referenced below.*

Schedule ref: FSA_20356_01
First Issued: 27 February 2020
Valid to: 26 February 2025
Issue No: 1

Ian Woodhouse
Director of Certification

UKAS PRODUCT CERTIFICATION 175

IFC Certification Ltd, 20 Park Street, Princes Risborough, Buckinghamshire, HP27 9AH, UK.
Tel: +44 (0)1844 275500 Fax: +(0)1844 274002 E-mail: info@ifccertification.com Web: www.ifccertification.com
Registered No: 4777898 England

The certificate and schedule are held in force by regular annual surveillance visits by IFC Certification and the reader or user should contact IFC Certification to validate its status. This certificate remains the property of IFC Certification and must be returned to them on demand.

F27 ©IFC Certification Ltd 2004



IFC certification

PRODUCT CERTIFICATION SCHEME SDP11-02

Certificate number: IFCC 1542

This is a product certificate to certify that

A1 Shutters Limited
Raikes Lane Industrial Estate,
Raikes Lane, Bolton BL3 2NH
Who fabricate the following product:

Product Type:	Active Fire Curtain Barrier Assembly
Product Name:	Flameshield Fire Curtain
Construction Type:	Single
Fabric Type:	4415-2-SP
Product Standard:	BS 8524-1:2013
Fire Resistance:	120 minutes Integrity (E) and 60 minutes Radiation (EW) performance to EN 1634-1:2014+A1:2018 (EN 1363-1:2012 & EN 1363-2:1999)
Classification:	E15, E20, E30, E45, E60, E90 & E120 plus EW60 to EN 13501-2:2016
Smoke Leakage:	2.99m3/m2/h to BS EN 1634 3:2004

have satisfied the requirements of scheme SDP11-2 this includes evaluation of the product performance in accordance with ***BS 8524-1:2013****, inspection of the Factory Production Control and continuing surveillance audits and testing of samples of products taken from production. The product specification and field of application are detailed in the Schedule referenced below.*

Schedule ref: FSA_20356_01 Rev A
First Issued: 27 February 2020
Revised: 02 November 2020
Valid to: 26 February 2025
Issue No: 2

Ian Woodhouse
Director of Certification

UKAS PRODUCT CERTIFICATION 175

IFC Certification Ltd, 20 Park Street, Princes Risborough, Buckinghamshire, HP27 9AH, UK.
Tel: +44 (0)1844 275500 Fax: +(0)1844 274002 E-mail: info@ifccertification.com Web: www.ifccertification.com
Registered No: 4777898 England

The certificate and schedule are held in force by regular annual surveillance visits by IFC Certification and the reader or user should contact IFC Certification to validate its status. This certificate remains the property of IFC Certification and must be returned to them on demand.

F27 ©IFC Certification Ltd 2004



CERTIFICATE

kiwa

CERTIFICATED INSTALLER OF ACTIVE FIRE PROTECTION

Certificate number: IFCC 3425

Certificate only valid if verified on website – www.ifccertification.com

Issued by IFC Certification Ltd part of the Kiwa UK Group

This is to certify that

A1 Shutters Limited
Jackson Works
Raikes Lane Industrial Estate
Bolton
BL3 2NH
Tel: 01204 383839

Installers of the following systems:

Smoke and Fire Curtain Barriers

have successfully completed the installation & commissioning requirements of IFCC scheme SD105 "Requirements for Contractors Installing Smoke Control Systems". This includes the verification/inspection of fire strategy, installation and commissioning of Smoke and Fire Curtain Barriers. The assessment and verification of the Quality Control system, competency assessment of individuals (as listed in the company's client secure section of the IFCC website) and continuing surveillance including random site audits.

Initial Certification: 19 February 2021
Revised: 21 February 2023
Valid to: 18 February 2026
Issue status: 2

Ian Woodhouse
Head of Technical – IFC Certification
Kiwa Ltd

This certificate consists of 2 pages.
Publication of this certificate is permitted.

IFC Certification Ltd
Ground Floor, Suite A, Building 2
Deer Brook Office Park
Mallen Street
Adlington
Cheshire
SK10 4NY
United Kingdom
T +44 (0)1844 276500
www.ifccertification.com

IFC Certification



CERTIFICATE

kiwa

The disciplines listed below have been assessed and registered by Kiwa against the provisions of:

Scheme Document No.	Product Discipline
SDI 00	General Requirements
SDI 05	Smoke and Fire Curtain Barriers

Signed on behalf of Kiwa Ltd

Ian Woodhouse
Head of Technical – IFC Certification
Kiwa Ltd

This certificate is subject to the installer continuing to comply with the Kiwa IFCC Installer Scheme Requirements including ongoing Annual Surveillance of the company's quality management systems and up to four random site audits

IFC Certification Ltd
Ground Floor, Suite A, Building 2
Deer Brook Office Park
Mallen Street
Adlington
Cheshire
SK10 4NY
United Kingdom
T +44 (0)1844 276500
www.ifccertification.com

IFC Certification

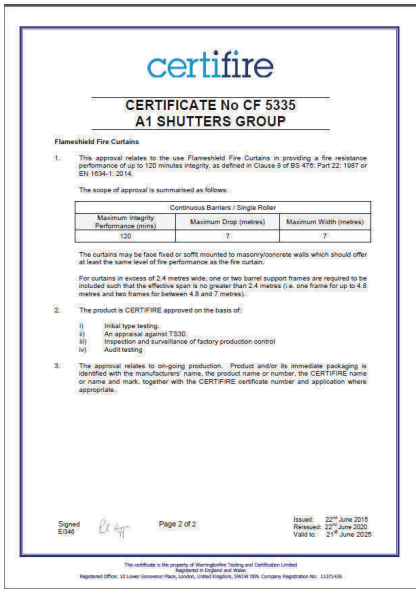

certifire

CERTIFICATE No CF 5335
A1 SHUTTERS GROUP

Flameshield Fire Curtains

1. This approval relates to the use Flameshield Fire Curtains in providing a fire resistance performance of up to 120 minutes integrity, as defined in Clause 8 of BS 476: Part 22: 1987 or EN 1634-1: 2014.

   The scope of approval is summarised as follows:

Continuous Barriers / Single Roller		
Maximum Integrity Performance (mins)	Maximum Drop (metres)	Maximum Width (metres)
120	7	7

   The curtains may be face fixed or soffit mounted to masonry/concrete walls which should offer at least the same level of fire performance as the fire curtain.

   For curtains in excess of 2.4 metres wide, one or two barrel support frames are required to be included such that the effective span is no greater than 2.4 metres (i.e. one frame for up to 4.8 metres and two frames for between 4.8 and 7 metres).

2. The product is CERTIFIRE approved on the basis of:
   i) Initial type testing.
   ii) An appraisal against TS30.
   iii) Inspection and surveillance of factory production control
   iv) Audit testing.

3. The approval relates to on-going production. Product and/or its immediate packaging is identified with the manufacturers' name, the product name or number, the CERTIFIRE name or name and mark, together with the CERTIFIRE certificate number and application where appropriate.

Signed
E348

Page 2 of 2

Issued: 22nd June 2015
Reissued: 22nd June 2020
Valid to: 21st June 2025

This certificate is the property of Warringtonfire Testing and Certification Limited
Registered in England and Wales
Registered Office: 10 Lower Grosvenor Place, London, United Kingdom, SW1W 0EN. Company Registration No: 11371436



certifire

CERTIFICATE OF APPROVAL
No CF 5335

This is to certify that, in accordance with TS00 General Requirements for Certification of Fire Protection Products the undermentioned products of

A1 SHUTTERS GROUP

Jackson Works, Raikes Lane Industrial Estate, Raikes Lane, Bolton, BL3 2NH

Tel: 01204 383839, Fax: 01204 381686

E-mail : sales@A1shutters.co.uk

Have been assessed against the requirements of the Technical Schedule(s) detailed below and are approved for use subject to the conditions appended hereto:

CERTIFIED PRODUCT	TECHNICAL SCHEDULE
Flameshield Fire Curtains	TS30 – Industrial Type Fire Resisting Doorsets

This certification is provided to the client for their own purposes and we cannot opine on whether it will be accepted by Building Control authorities or any other third parties for any purpose.

Signed and sealed for and on behalf of Warringtonfire Testing and Certification Limited

Paul Duggan
Certification Manager

Issued: 22nd June 2015
Reissued: 22nd June 2020
Valid to: 21st June 2025

Page 1 of 2

This certificate is the property of Warringtonfire Testing and Certification Limited
Registered in England and Wales
Registered Office: 10 Lower Grosvenor Place, London, United Kingdom, SW1W 0EN. Company Registration No: 11371436

Fire Curtain and Smoke Curtain

Flameshield 8524 OV

FLAMESHIELD BS8524 FIRE CURTAIN HEADBOX CONFIGURATION SECTIONS - OVERLAPPING

FLAMESHIELD
STD 180 x 380mm

PRODUCT	MAX WIDTH (C)	MAX DROP (D)	FABRIC
FC	UNLIMITED	3800	A1 STD
EW 120	30000	3000	A1 120

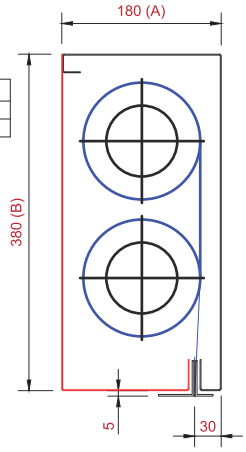

FLAMESHIELD
STD 225 x 425mm

PRODUCT	MAX WIDTH (C)	MAX DROP (D)	FABRIC
FC	UNLIMITED	8000	A1 STD
EW 120	30000	6000	A1 120

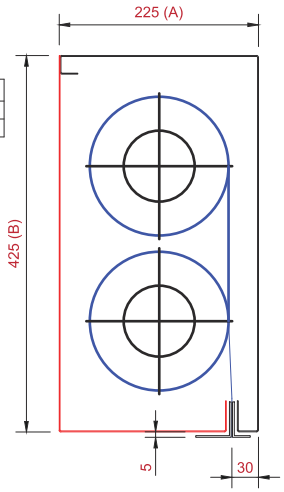

FLAMESHIELD BS8524 OVERLAPPING FIRE CURTAIN GENERAL ARRANGEMENT DRAWING: FACE FIT

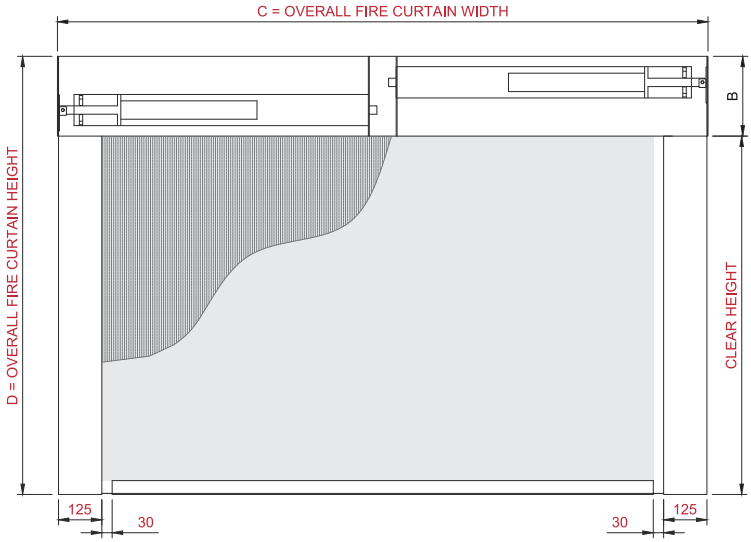

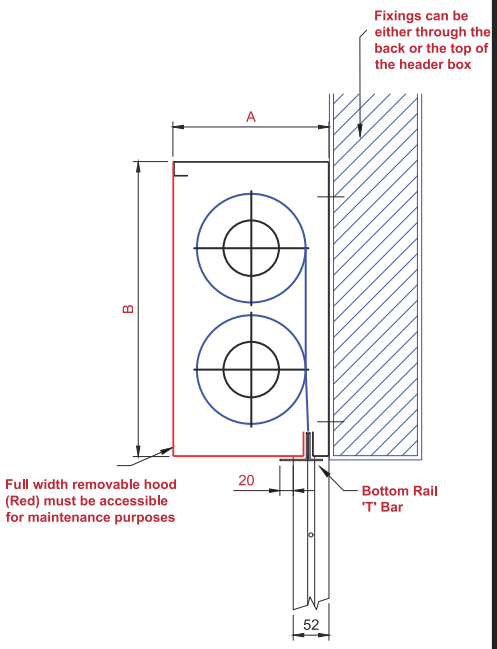

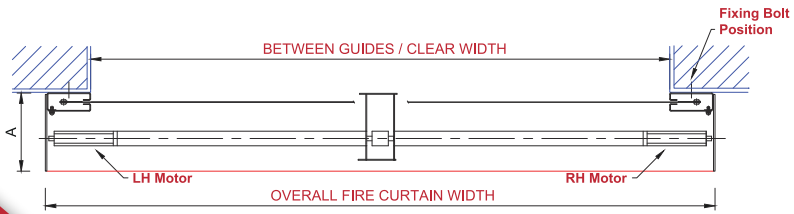

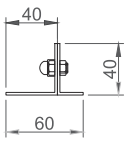

BOTTOM RAIL DETAIL

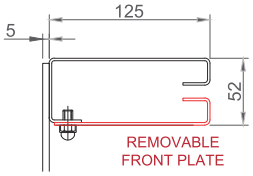

STANDARD GUIDE DETAIL

Fire Curtain and Smoke Curtain

Curtain Testing

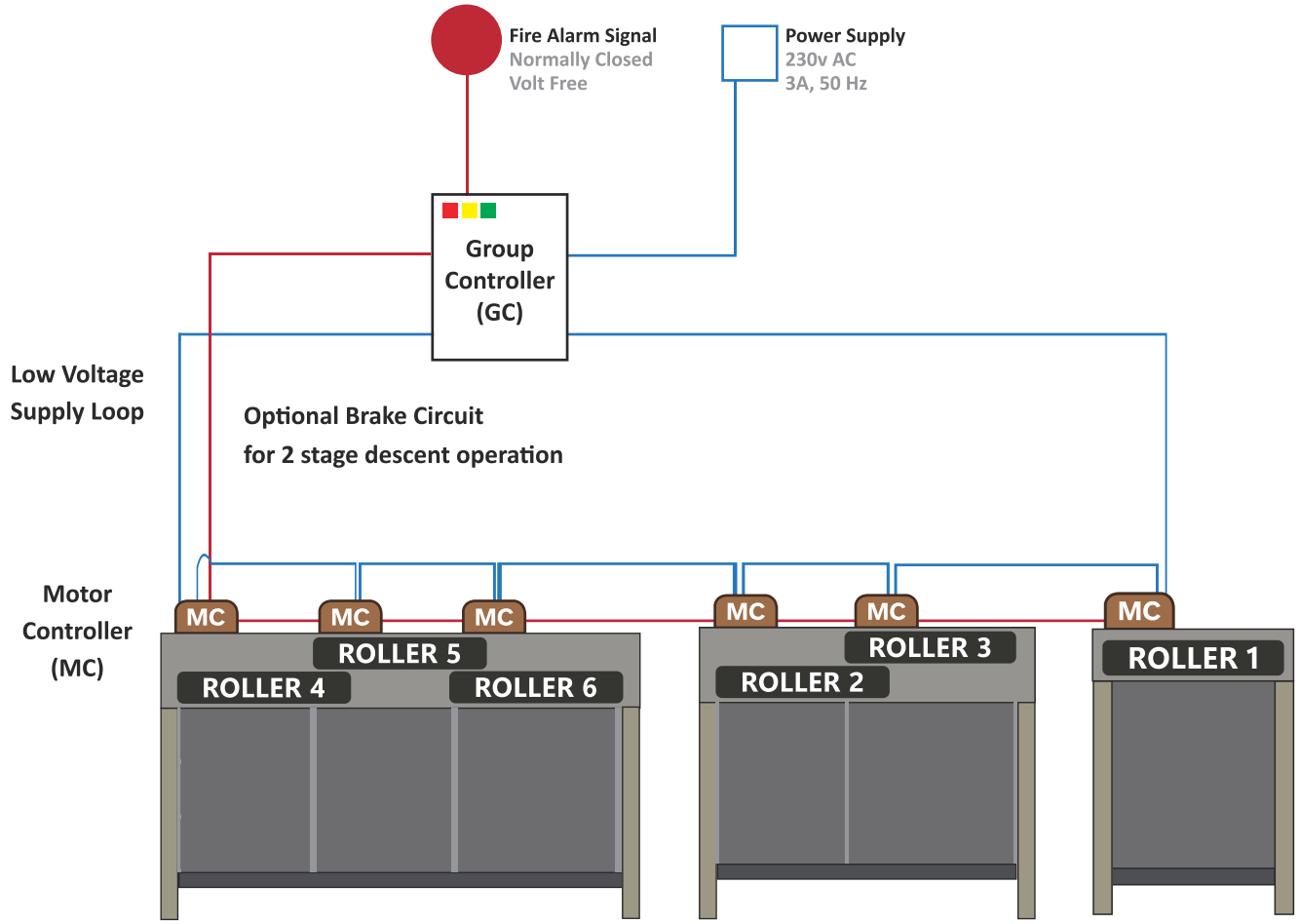





Project Oxygen With Russell's **Construction**



Oman Convention and Exhibition Ce



Royal Papworth Hospital **Cambridge**

Burj Khalifa **Dubai**

Burj Khalifa, Dubai, the World's Tallest Building designed by Adrian Smith Architects.

A1S manufactured Flameshield 1634S fire curtains with air leakage to EN BS 1634-3 which were discreetly fitted 'reveal fix' throughout lift lobbies areas.



Police General Hospital



Fire Curtain and Smoke Curtain

SLIM-TECH

AURA



Slimtech Co.,Ltd. (Head Office)
63 Moo 4, Tumbon Khlong Si, Amphoe Klong Luang
Pathum Thani 12120 Thailand
Tel : 02-063 3218 Fax : 02 051 2219
Tax ID : 0105543013271
Email : slimtech_2@hotmail.com
Website : www.slimtech2002.com