UTOPIA

Wall Guard

AURA by slimtech

SLIM TECH



Collection

www.slimtech2002.com

Fireproof | Crashproof | Sunproof | Fungusproof

Corner Guard

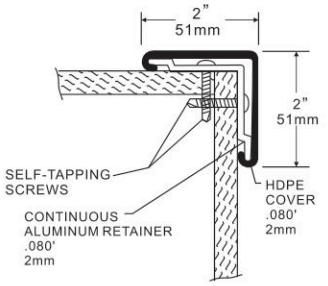



USA 5190C
Vinyl & Aluminum Corner Guards
51 mm x 51 mm Width 90 degree

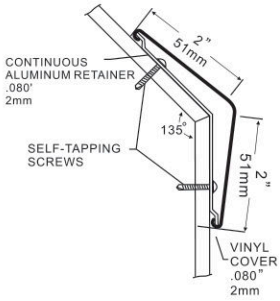



USA 51135C
Vinyl & Aluminum Corner Guards
51 mm x 51 mm Width 135 degree





USA 7690C
Vinyl & Aluminum Corner Guards
76 mm x 76 mm Width 90 degree

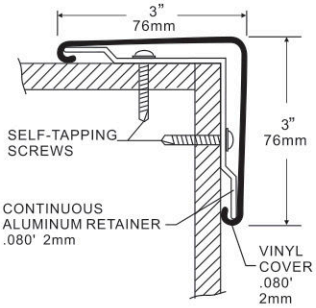

1.

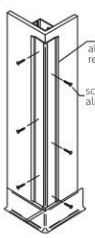

Please read all instruction before installing corner guard

Material must be stored, installed and used inenvironmentally controlled conditions.

1. position vinyl retainer against allowance for bottom csa. secure retainer to the wall by staggering fasteners on each wing of the retainer See figure 1.

①

2.



2. Overlap the retainer with the mouting taps of the top and bottom caps and attach them to retainer.Stagger the fasteners on each wing of the cap. See figure 2.

When installing fexible top caps on custom angle corner guard, use cup washer and flat head screws to fasten the top caps to the retainer. See figure 2a.



②

3.

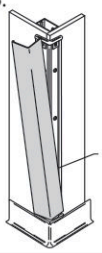

3. Position cover the retainer and adjust the top cap fora tight fit starting at the top. Push cover on to the retainer pressing over the entire length until it snaps in to place. See figure 3

③

Wall Panel

ACCESSORIES OF INSTALLATION

1.Aluminum Trim Pieces

① Outside Corner ② Top Capping Strip ③ Inside Corner ④ Join Strip

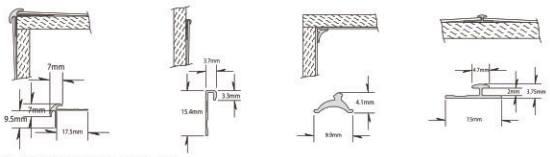

2.Solid Color Trim Pieces

① Outside Corner ② Top Capping Strip ③ Inside Corner ④ Join Strip

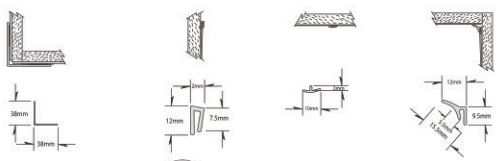

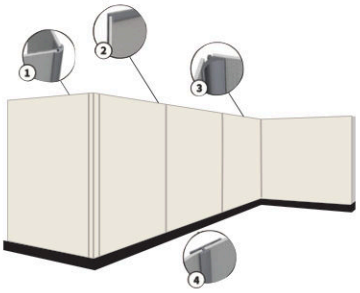



Please contact to select a color.

SLIM TECH

Wall Guard

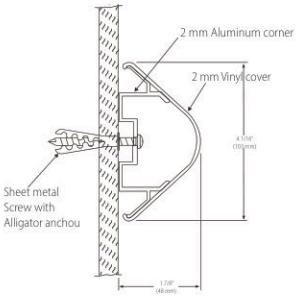

103 mm Height, 5m Length



USA 1031
Vinyl & Aluminum Wall Guards
in single color



USA 1032
Vinyl & Aluminum Wall Guards
in single wood color

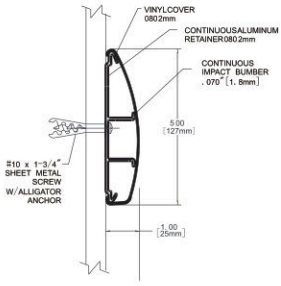

127 mm Height, 5m Length



USA 1271
Vinyl & Aluminum Wall Guards
in single color



USA 1272
Vinyl & Aluminum Wall Guards
in single wood color



USA 1273
Vinyl & Aluminum Wall Guards
with 60 mm height wood color strip

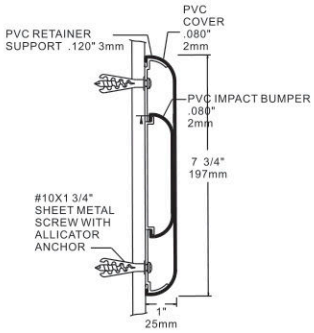

197 mm Height, 5m Length



USA 1971
Vinyl Cover+Vinyl Cover Retainer+Aluminum
Wall Guards in single color



USA 1972
Vinyl Cover+Vinyl Cover Retainer+Aluminum
Wall Guards in single wood color



USA 1973
Vinyl Cover+Vinyl Cover Retainer+Aluminum
Wall Guards with 100 mm height wood color strip



USA 1974
Vinyl Cover+Vinyl Cover Retainer+Aluminum
Wall Guards different color

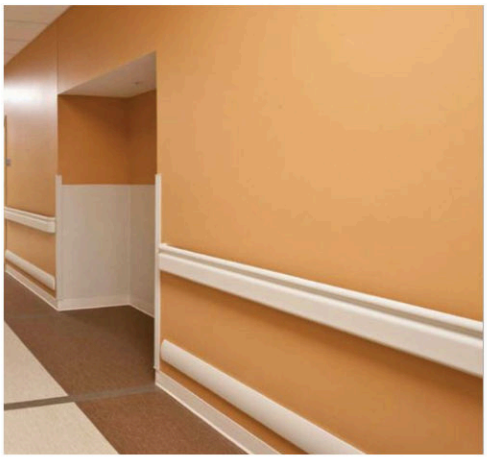

1.

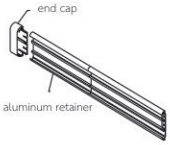

Please read all instruction before installing corner guard

1. Cut aluminum retainer to desired lenght, leaving allowance for end caps. See figure 1.

2.

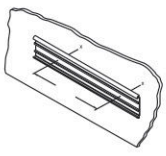

2. Drill holes to centerline of retainer using 1/4"drill bit.Position reatainer on wall allowing for end caps/corners Level and mark holes.See figure2

3.

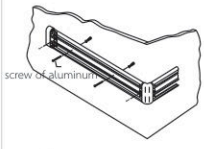

3. Drill marked holes on wall using a 1/4" drill bit and position Alligator anchors into holes.Mount retainer in wall and tighten screws to secure. Slideend caps and corners onto the retainer and secure, leaving a 1/16" gap between returns/ corners and retainer to allow for adjustment.See Figure 3.

4.

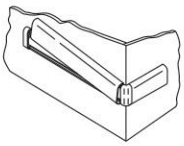

4. Cut the impact bumper to the length between the inside edge of the end caps/ corners.Position and snap bumper in place.Cut the cover to length between end capsand/or corners.Position cover on retainer and adjust returns and/or corners fora tight fit.Push cover over the retainer until it snaps into place.See Figure 4.

Please contact to select a color.

SLIM TECH

Handrail

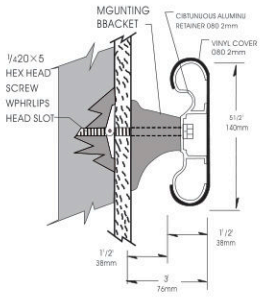

140 mm Height, 5 m Length
38 mm distance with wall,
38 mm grip



USA 1401
Vinyl & Aluminum Handrail in single color



USA 1402
Vinyl & Aluminum Handrail with 35 mm color strip



USA 1404
Vinyl & Aluminum Handrail with 80 mm color strip



USA 1403
Vinyl & Aluminum Handrail with 35 mm color strip

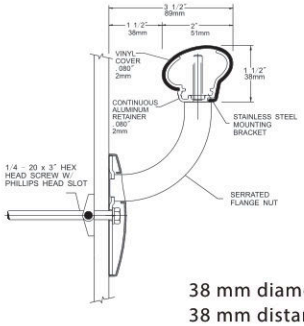

38 mm diameter,5m length,
38 mm distance with wall



USA 511
Vinyl & Aluminum Handrail in single color



USA 512
Vinyl & Aluminum Handrail in single wood color



USA 159A
Vinyl&Aluminum Handrailin single color



USA 159B
Vinyl&Aluminum Handrailwith different color curve



USA 159C
Vinyl&Aluminum Handrail with different color grip



USA 159E
Vinyl&Aluminum Handrailwith different color bumper

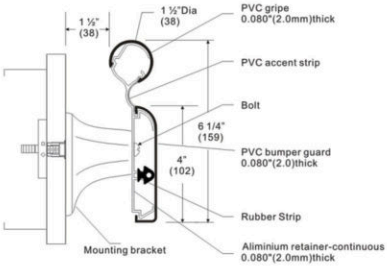

159mm Height,5m Length
38mm distance with wall,38mm grip

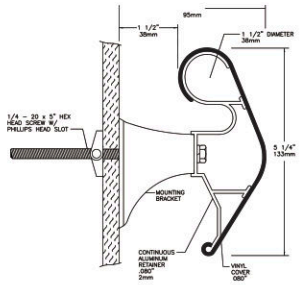



USA 133
Vinyl & Aluminum Handrail in single color
133 mm. Height, 5m Length
38 mm distance with wall,
38 mm grip



USA 1591
Vinyl&Aluminum Handrail in single color



USA 1592
Vinyl&Aluminum Handrail with different color curve



USA 1593
Vinyl&Aluminum Handrail with different color grip and bumper

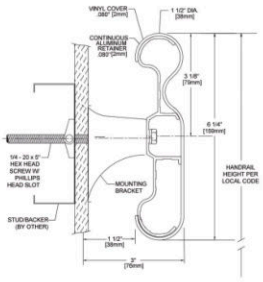

159mm Height,5m Length
38mm distance with wall,38mm gri



USA 1597
Vinyl&Aluminum Handrail with different color grip



USA 1598
Vinyl&Aluminum Handrail with in single wood color



USA 1599
Vinyl&Aluminum Handrail with different color grip

Please contact to select a color.

SLIM TECH

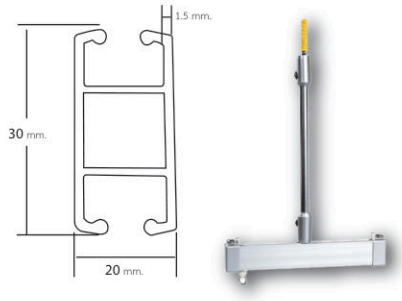

European luxury rail YL-45

Material : aluminum alloy

Thickness : 1.5

Type : Straight/U-type/O-type/L-type

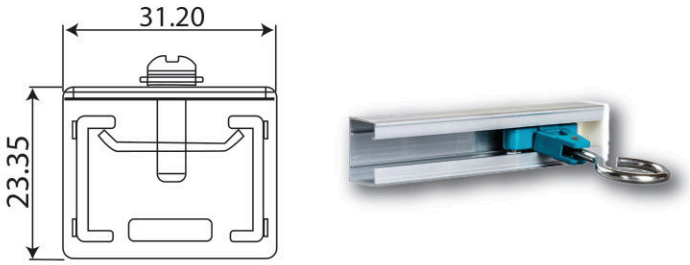

European luxury rail YL-45

Material : aluminum alloy

Thickness : 1.5

Type : Straight/U-type/O-type/L-type



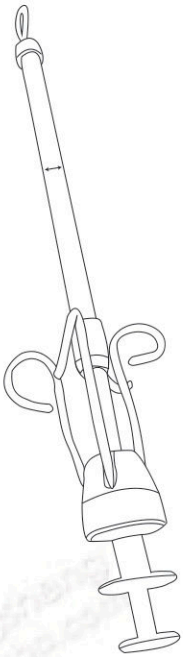

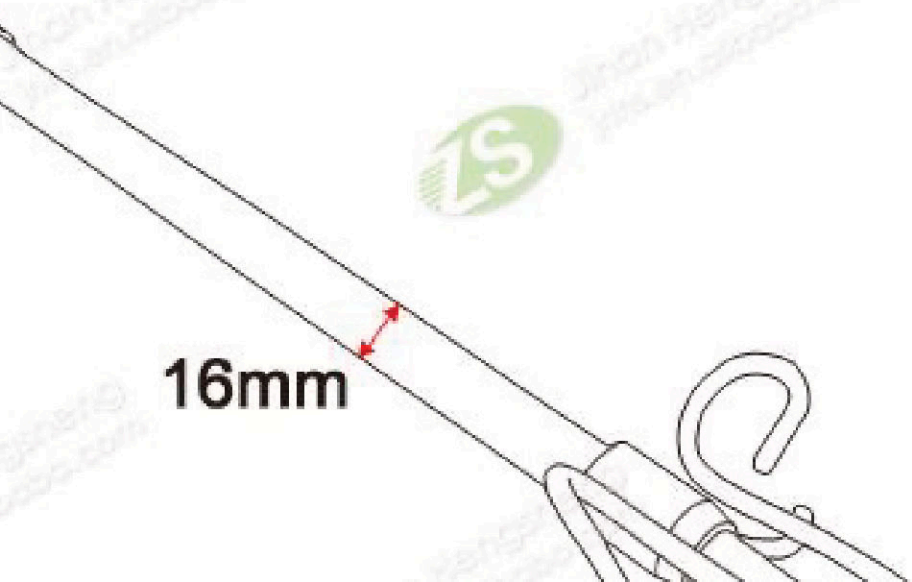

utopia wall gurd collection



- Anti bacterial
- Anti bacterial
- Chemical ressistance
- No benzene-No heavy metal
- Formaldehyde and green environment

UTOPIA

Slimtech Co., Ltd. (Head Office)

63 Moo 4, Tambon khlong Si, Amphoe Khlong Luang, Pathum Thani 12120

Tax ID : 0105543013271

Tel : 02 063 3218 Fax : 02 051 2219

Email : slimtech_2@hotmail.com Website : www.slimtech2002.com

SLIM TECH

AURA